Solar360 Mobile Energy

Power container project ROI in Philippines

Powered by Solar360 Mobile Energy

Power container project ROI in Philippines

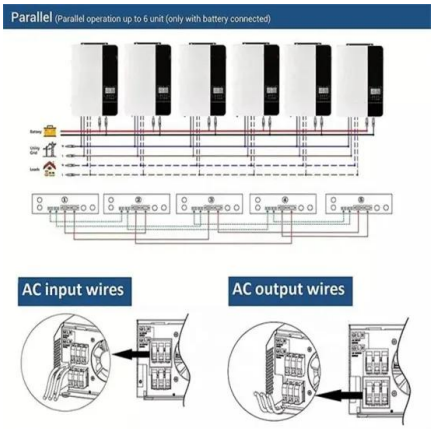

How the Philippines can lead in floating solar technology in Asia

Image: ASES "Most floating solar projects I've seen are done in calm waters as it's the easiest way of deploying them. Very few countries have floating solar deployed right away in strong ...

Offshore wind projects set to boost clean energy and ...

Support the Philippines' renewable energy journey by staying informed about offshore wind developments. Share your thoughts on how clean energy can improve lives and secure a better future for generations to come ...

Philippines Container Homes Offer Affordable Investment

These homes are built using repurposed shipping containers and are designed to be energy-efficient and disaster-resilient. These initiatives demonstrate the viability of container homes as a solution to the affordable ...

PH Launches Green Energy Auction 4, Pioneering ...

The Philippine government has officially launched the fourth round of its Green Energy Auction (GEA-4), announced today by the Department of Energy (DOE). This auction introduces a groundbreaking feature: the ...

Power Train Unit

Power Train Unit Cloud computing, 4G/5G and media streaming applications are driving the exponential growth of data traffic. IT managers are now facing the challenges of data center scalability for future IT expansion. As a world ...

Powering Through Grid Challenges with the Tanay ...

Nestled in the rolling hills of Tanay, Rizal, a new renewable energy project is taking shape--Alternergy Holdings Corporation's (ALTER) 112-megawatt (MW) Tanay Wind Power Project. This wind farm is not just another ...

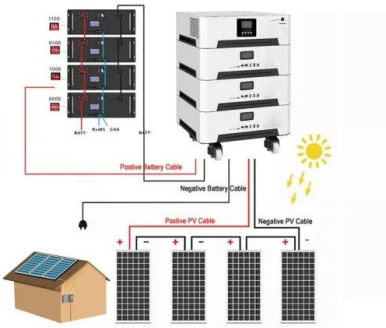

Sungrow inks 1.5GWh BESS supply agreement in the ...

The agreement was confirmed in a statement released by project developer Terra Solar Philippines, a company set up specifically for it as a subsidiary of independent power producer SP New Energy Corporation, which ...

Container Housing Analysis Project

This project analyzes the feasibility of recycling shipping containers into sustainable housing options for urban development, primarily relating to a Philippine setting (wherever possible) with a focus on cost comparison, ...

[How the Philippines can lead in floating solar ...]

Image: ASES "Most floating solar projects I've seen are done in calm waters as it's the easiest way of deploying them. Very few countries have floating solar deployed right away in strong winds like the Philippines," Reindl told Eco ...

[CIP to invest USD 30M in PH projects by mid-2025 - ...]

Denmark firm Copenhagen Infrastructure Partners (CIP) is gearing up to invest USD 30 million in the Philippines by the middle of 2025, focusing on development activities ahead of the Green Energy Auction Program (GEAP). ...

[Calculating Return-On-Investment For Condo Units in ...]

The rise in the number of buildings featuring condo units made it more attractive to people who focus on property ownership or investment. All these result from the increase in the number of developers - which brought in ...

[DOE Awards Over 6,000 MW of Renewable Energy ...]

The Department of Energy (DOE) has officially released the Notice of Award (NOA) for the third round of the Green Energy Auction (GEA-3), unlocking over 6,000 megawatts (MW) in renewable energy capacity across ...

[Prime Infra's pumped storage projects tagged as ...]

The two projects, namely the Pakil Pumped Storage Power Project in Laguna and the Wawa Pumped Storage Power Project in Rizal, are designed to meet energy demand by harnessing the potential of renewable ...

[DOE issues CEPNS to 149 projects, expects ...]

The Department of Energy (DOE) has issued Certificates of Energy Projects of National Significance (CEPNS) to 149 power generation and transmission projects from May to December 2024, representing a total ...

Contact Us

For catalog requests, pricing, or partnerships, please visit: https://solar360.co.za